Rechargeable Lithium-Ion Phosphate (LFP) Battery

US5000 Series Operation Manual

Information Version: 1.1

5PMPA08-00058

Legal Information

Copyright©2024 Pylon Technologies Co., Ltd. All rights reserved.

Any reproduction or distribution of this manual or any part of this manual, or any uploading of this manual to a third party website, in any form by any means, without the prior written consent of Pylon Technologies Co., Ltd., is prohibited.

Disclaimer

The manual contains instructions for the use of the product. All the pictures and charts in this manual are for description and explanation only. Pylon Technologies Co., Ltd. reserves the right to change the information in the manual which is subject to change without further notice.

Please read this manual carefully before using the product and keep this manual for further reference. Failure to use the product in accordance with the manual may result in serious injuries, property damages and may void the warranty, for which Pylon Technologies Co., Ltd. shall not be liable.

Pylon Technologies Co., Ltd. makes no representations or warranties express or implied, with respect to all the information in this manual.

In the event of any conflicts between this manual and the applicable law, the latter prevails.

The final interpretation of this manual belongs to Pylon Technologies Co., Ltd.

Contents

1 Information about this manual 1

1.1 Purpose 1

1.2 Explanation of symbols 1

1.3 Abbreviations in this manual 1

2 Safety 2

2.1 Symbols 2

2.2 Personal Requirements 4

2.3 General Safety 4

2.4 Safety Instructions Before Connecting the Battery 7

2.5 Safety Instructions in Using the Battery 7

3 System Introduction 8

3.1 System Description 8

3.1.1 Features 8

3.1.2 System Specifications 9

3.2 Equipment Interface Instructions 10

3.3 Capacity Expansion 14

3.4 Schematic Diagram of Solution 15

3.5 Label 15

4 Installation and Cable Connection 16

4.1 Checking Before Installation 16

4.2 Preparing Tools and Instruments 18

4.3 Selecting the Installation Sites 19

4.4 System Installation 20

4.4.1 Battery Dimensions 20

4.4.2 Installation Direction 21

4.5 Cable Connection 22

4.5.1 Grounding 22

4.5.2 Putting into Cabinet or Rack 23

4.5.3 Installing Brackets 24

4.5.4 Installing the wall mount rack 26

4.6 Suitable Disconnection Device 27

5 Operation 28

5.1 System Turning On 28

5.2 System Turning Off 30

5.3 Multi-groups Mode 30

6 Troubleshooting 33

7 Emergency Situations 35

8 Shipment and Storage 36

8.1 Shipment 36

8.2 Storage & Maintenance 36

9 Recycle and Disposal 37

1 Information about this manual

1.1 Purpose

This manual describes the US5000 (unless otherwise indicated, all US5000 information applies to US5000-B) from Pylontech in terms of its overview, installation, commissioning, maintenance, etc. Please read this manual before installing the battery and follow the instructions carefully during installation. In case of any confusion, please contact Pylontech immediately for advice and clarification (Contact information can be found on the back cover of the manual).

1.2 Explanation of symbols

Symbol	Description
⚠ DANGER	**Danger**: Indicates a hazard with a high level of risk which, if not avoided, will result in death or serious injury.
⚠ WARNING	**Warning**: Indicates a hazard with a medium level of risk which, if not avoided, could result in death or serious injury.
⚠ CAUTION	**Caution:** Indicates a hazard with a low level of risk which, if not avoided, could result in minor or moderate injury.

1.3 Abbreviations in this manual

Abbreviation	Designation
Pylontech	Pylon Technologies Co., Ltd.
QC	Quality Control
BMS	Battery Management System
PCS	Power Conversion System
SOC	State of Charge
EMS	Energy Management System

2 Safety

2.1 Symbols

	Read the manual before installing and operating the battery system.
	General warning label indicating potential hazards.
	Warning: electric shock!
	Warning: flammable materials.
	Do not connect the positive and negative reversely.
	Keep away from flame or ignition sources.
	Keep away from children.
	Grounding.

	Recycle label.
	The certificate label for EMC/CE.
	The certificate label for UKCA.
	The certificate label for Safety by TÜV SÜD.
C US 274187	The certificate label for Safety by CSA.
	Label for Waste Electrical and Electronic Equipment (WEEE) Directive (2012/19/EU).

2.2 Personal Requirements

Qualified personnel must have the following skills:

- Training in the installation and commissioning of the electrical system, as well as the dealing with hazards.
- Knowledge of the manual and other related documents.
- Knowledge of the local regulations and directives.

2.3 General Safety

Declaration

This system is only operated by authorized personnel. Read all safety instructions carefully prior to any work and follow these instructions at all times when working with the system.

Incorrect operation or work may cause:

- Injury or death to the operator or a third party.
- Damage to the system hardware and other properties belonging to the operator or a third party.

General Requirements

⚠ DANGER

Danger: Batteries deliver electric power, resulting in burns or a fire hazard when short circuit or incorrect installment occurs.

⚠ DANGER

Danger: Lethal voltages are present in the battery terminals and cables. Severe injuries or death may occur if you touch the cables and terminals.

⚠ DANGER

Danger: Battery strings will produce high voltage DC power and can cause a lethal voltage and an electric shock. Only qualified personnel can perform the wiring of the battery strings.

⚠ WARNING

Warning: DO NOT open, repair, or disassemble the battery unless by staffs from Pylontech or authorized by Pylontech. We do not undertake any consequences or related responsibility caused by violation of safety operation or violation of design, production and equipment safety standards.

⚠ WARNING

Warning: Whenever operating the battery system, wear suitable personal protective equipment (PPE) such as rubber gloves, rubber boots and goggles.

⚠ WARNING

Warning: For this system, working temperature is -10°C~ 50°C and the optimum temperature is: 10°C~ 40°C. Out of the working temperature range may cause the battery system over/low temperature alarm or protection which will further lead to the cycle life reduction. It will affect the warranty terms as well.

⚠ WARNING

Warning: DO NOT connect battery with PV solar wiring directly.

⚠ WARNING

Warning: For battery installation, the installer shall refer to NFPA70 or similar local installation standard for operation.

⚠ WARNING

Warning: Pulling out the connectors while the system is working could lead to battery system damage or personal injury. Do not pull out the connectors while system is in operation. De-energize all multiple power sources and verify that there is no voltage.

⚠ WARNING

Warning: DO NOT insert any foreign object into any part of battery.

⚠ WARNING

Warning: DO NOT expose cables outside.

⚠ WARNING

Warning: DO NOT expose battery to flammable or harsh chemicals or vapors. Keep the battery away from water and fire.

⚠ CAUTION

Caution: Improper settings or maintenance can permanently damage the battery.

⚠ CAUTION

Caution: Incorrect inverter parameters will lead to the premature aging of battery or battery system failure.

⚠ CAUTION

Caution: Battery needs to be recharged within 12 hours, after fully discharged.

⚠ CAUTION

Caution: Do not use cleaning solvents to clean battery.

⚠ CAUTION

Caution: Do not paint any part of battery, include any internal or external components.

Please contact the supplier within 24 hours if there is something abnormal.

The warranty claims are excluded for direct or indirect damage due to items above.

2.4 Safety Instructions Before Connecting the Battery

⚠ **CAUTION**

Caution:

- After unpacking, please check product and packing list first, if the product is damaged or lack of parts, please contact the local retailer.
- Before installation, be sure to cut off the grid power and make sure the battery is in the switched-off mode.
- Wiring must be correct, do not mistake the positive and negative cables, and ensure no short circuit with the external device.
- DO NOT connect the battery with AC power directly.
- Battery system must be well grounded and the resistance must be less than 100mΩ.
- Please ensure the electrical parameters of battery system are compatible to related equipment.
- Keep the battery away from water and fire.
- Please keep the battery away from radiation environment installation.
- Please avoid installing batteries in earthquake-prone areas.
- Please keep the battery away from corrosive gases and liquid areas.
- In the battery installation area, please reserve a safe escape route and indicate it with a symbol.
- This device is not equipped with a fire alarm system, please prepare yourself with a sound-light alarm in the battery installation area.

2.5 Safety Instructions in Using the Battery

⚠ **CAUTION**

Caution:

- If the battery system needs to be moved or repaired, the power must be cut off and the battery is completely shut down in advance.
- DO NOT connect the battery with other different type of battery.
- DO NOT let the batteries work with faulty or incompatible inverter.
- DO NOT disassemble the battery (QC tab removed or damaged).
- In case of fire, only dry powder fire extinguisher can be used. DO NOT use liquid fire extinguishers.

3 System Introduction

3.1 System Description

US5000/US5000-B lithium iron phosphate battery is the new energy storage product developed and produced by Pylontech, which can provide reliable high power for various types of equipment and systems.

3.1.1 Features

1) Build-in soft-start function able to reduce current strike when inverter needs to start from battery.
2) Dual active protection on BMS level.
3) Automatic address setting when connected in multi-group.
4) Supporting wakeup by 5~12V signal from RJ45 port.
5) Supporting upgrade battery module from upper controller via CAN or RS485 communication.
6) Enabling 95% depth of discharge, available for the inverter which completely follows Pylontech latest protocol to operate.
7) Non-toxic, non-pollution and environmentally friendly battery module.
8) Cathode material made from LiFePO4 with safety performance and long cycle life.
9) Battery management system (BMS) has protection functions including over-discharge, over-charge, over-current and high/low temperature.
10) The system can automatically manage charge and discharge state and balance voltage of each cell.
11) Flexible configuration, multiple battery modules can be in parallel for expanding capacity and power.
12) Adoption of self-cooling mode which rapidly reduces system entire noise.
13) The module has less self-discharge, up to 12 months without charging it on shelf, no memory effect, excellent performance of shallow charge and discharge.
14) Small size and light weight, the standard 19-inch embedded designed module is easy for installation and maintenance.
15) Compatible with the 48V series battery of Pylontech.
    *Mixture using master battery priority: US5000> UP5000/US3000C/US2000C> U3000/ US2000
    For same type of module always use the latest production unit as master.
    *Mixture using battery deployment option:

Master battery (1st)	US5000
Slave 2nd ~8th	US5000/UP5000/US3000C/US2000C/ US3000/US2000
Slave 9th ~16th	US5000/UP5000/US3000C/US2000C

3.1.2 System Specifications

Basic Parameters	US5000	US5000-B
Nominal Voltage (VDC)	48	
Nominal Capacity (Wh)	4800	
Usable Capacity (Wh)	4560	
Depth of discharge (%)	95	
Dimensions (mm)	442 (W) x 420 (D) x 161 (H)	
Weight (kg)	39.7	40
Discharge Voltage (VDC)	43.5 ~ 53.5	
Charge Voltage (VDC)	52.5 ~ 53.5	
Recommended Charge/Discharge Current (A)*	100	
Maximum continuous Charge/Discharge Current (A)*	100	
Peak Charge/Discharge Current (A)	105~119@ 15 minutes	
	120~200@ 15 seconds	
Communication	RS485, CAN	
Configuration (maximum amount in 1 battery group)	16 pcs	
Working Temperature (°C)	0°C ~50°C Charge	
	-10°C ~50°C Discharge	
Shelf Temperature (°C)	-20°C ~45°C	
Short current/duration time	<2000A/ 1 millisecond	
Cooling type	Natural	
Breaker	No	Yes
Protective class	I	
IP rating of enclosure	IP20	
Humidity	5% ~ 95%(RH) No Condensation	
Altitude (m)	≤ 4,000 m	
Certification	TÜV / CE / UL / UN38.3	
Design life (year)	15+ (25°C)	
Cycle Life (cycle) **	> 8,000 (25°C)	
Reference standards	IEC62619, IEC63056, UL1973, UL9540A, IEC61000-6-2, IEC61000-6-3, UN38.3	

*The recommended and maximum continuous operation current is for a battery cell temperature within 10~40°C to consider, out of such temperature range will cause a derating on operation current.

** Cycle Life is defined based on specific operation conditions, for more details please check with Pylontech service team.

3.2 Equipment Interface Instructions

US5000 front panel

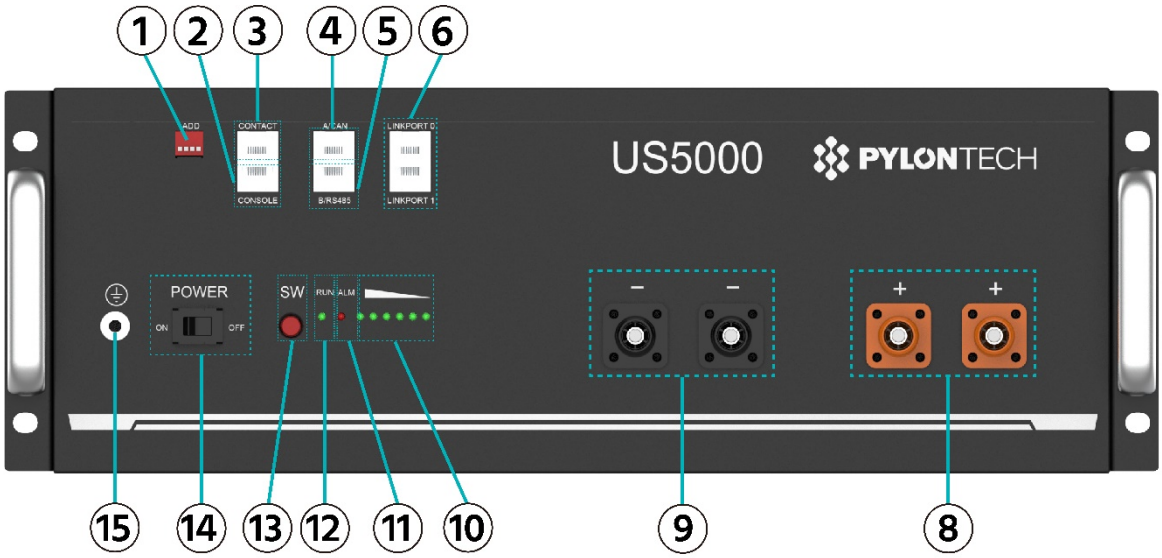

US5000-B front panel

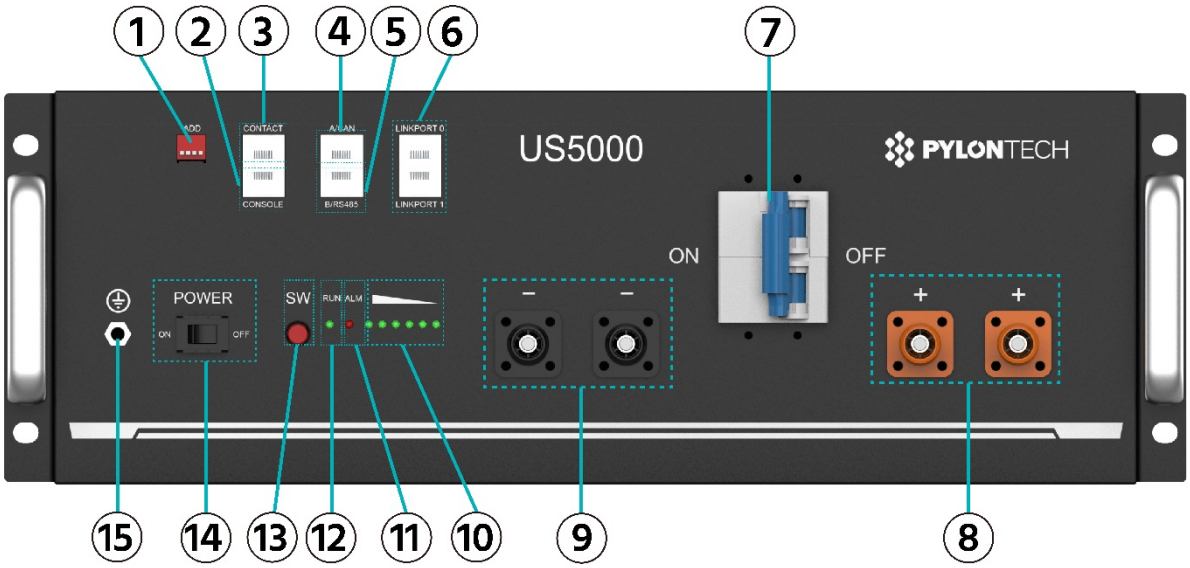

Figure	Description	Figure	Description
①	ADD	⑥	Link Port 0/1
②	Console	⑦	Breaker (applies to US5000-B ONLY)
③	Contact	⑧	Power Terminals (+)
④	A/CAN	⑨	Power Terminals (-)
⑤	B/RS485	⑩	SOC LED
⑪	ALM (Alarm) LED	⑭	Power Switch
⑫	RUN LED	⑮	Grounding Point
⑬	SW (Start) Switch		

① ADD (Dip Switch)

Dip1: RS485 baud rate: 1: 9600; 0: 115200. After change, please restart the battery.

Dip2: CAN terminal resistance on BMS side. 1: NONE. 0: connected. After change, no restart is required.

- **For single group mode, please keep dip2 at 0 position.**
- **For multi-groups mode, please refer to *section 5.3 Multi-groups Mode.***

Dip3~4, reversed.

Based on design of BMS, the dip switch is deployed physically reversely.

For instance:

Dip1	Dip2	Dip3	Dip4	The corresponding position of switch	Status
0	**0**	**0**	**0**		RS485:115200 CAN terminal resistance: connected
1	**0**	**0**	**0**	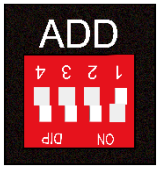	RS485:9600 CAN terminal resistance: connected
0	**1**	**0**	**0**	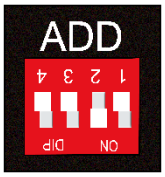	RS485: 115200 CAN terminal resistance: disconnected.

② Console

For manufacturer or professional engineer to debug or service.

Pin3	232-TX
Pin4*	+5~+12V for wake up
Pin5*	GND for wake up
Pin6	232-RX
Pin8	232-GND
*Wake up signal shall ≥0.5 seconds, current between 5~15mA. After sending wake up signal, the voltage shall disappear for normal operation.	

③ Contact

Pin1	Input, passive signal. On: turn off battery. Off: normal.	
Pin2		
Pin3	Output1. On: stop charge.	**+**
Pin4		**-**
Pin5	Output2. On: stop discharge.	**+**
Pin6		**-**
Pin7	Output3. On: BMS error.	**+**
Pin8		**-**

Input terminals: BMS provides 5VDC internally. External contactor controls ON/OFF.

Output terminals: BMS controls ON/OFF. External source requests signal voltage ≤ 25V, current < 0.3A.

④ A/CAN

500 Kbps. Recommended 120Ω. To inverter or upper battery.

⑤ B/RS485

9600 or 115200 bps. Recommended 120Ω. To inverter or slave battery.

⑥ Link Port 0, 1

For communication between multiple parallel batteries.

Definitions of RJ45 Port Pin

Pin NO.	A/CAN	B/RS485
Pin1	These pins shall be NULL.	
Pin2	If not, may influence communication	
Pin3	between BMS and inverter.	
Pin4	CAN-H	CAN-H
Pin5	CAH-L	CAN-L
Pin6	CAN-GND	CAN-GND
Pin7	485A	485A
Pin8	485B	485B

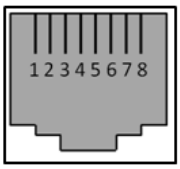

RJ45 Port

RJ45 Plug

⑦ Breaker (applies to US5000-B ONLY)

Parameter: type C, rated voltage 60V/DC, rated current 125A, Icu: 10kA. Standard reference: UL1077, IEC60947-2.

ON: power terminals connect with battery.

OFF: power terminals disconnect with battery.

NOTE: When the breaker trips for protection, check the root cause of current surge and cable connection between battery and inverter first. Then try to connect again.

⑧⑨ Power Terminals (+/-)

Power terminals: there are two pairs of terminals with same function, one connected to equipment, the other connected in parallel to other battery modules for capacity expanding.

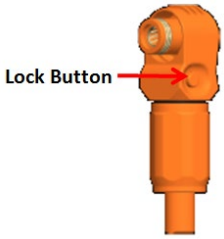

As power cables use self-locked connectors, be sure to keep pressing this Lock Button while pulling out the power plug.

⑩ SOC LED

LEDs to indicate the battery's current capacity. Refer to the following ***Table of LED Status Indicators*** for details.

⑪ ALM (Alarm) LED

Red LED flashing to indicate the battery has alarm; lighting to indicate the battery is under protection.

Refer to the following ***Table of LED Status Indicators*** for details.

Table of LED Status Indicators

LED	RUN (LED)	ALM (LED)	SOC LED (six lights indicating SOC level)					
Status	Run	Alarm	1	2	3	4	5	6
Power off	-	-	-	-	-	-	-	-
Power on	●		●	●	●	●	●	●
Idle/Normal	●	-	-	-	-	-	-	-
Charge	●	-	Indicate SOC; highest LED flash, on 0.5 seconds, off 0.5 seconds					
Discharge	●		Indicate SOC					
Alarm	ALR: ●; Other LEDs are same as above.							
System Error/Protect	-	●	-	-	-	-	-	
●/●	ON							
●	flash, on: 0.3 seconds; off: 3.7 seconds							
●/●	flash, on: 0.5 seconds; off: 1.5 seconds							
SOC level (%)			91-100	70-90	51-70	31-50	11-30	0~10

⑫ RUN LED

Green LED flashing or lighting to indicate the battery running status.

⑬ Start (SW) Switch

ON: press more than 0.5 seconds to turn on the battery.

OFF: press more than 0.5 seconds to turn off the battery.

⑭ Power Switch

ON: Power on.

OFF: Power off, for storage or shipping.

⑮ Grounding Point

To connect the grounding cable.

Table of BMS basic function

Protection and alarm	Management and monitor
Charge/Discharge End	Cells Balance
Charge Over Voltage	Intelligent Charge Model
Discharge Under Voltage	Charge/Discharge Current Limit
Charge/Discharge Over Current	Capacity Retention Calculate
High/Low Temperature(cell/BMS)	Administrator Monitor
Short Circuit	Operation Record
	Power Cables Reverse
	Soft start of inverter

3.3 Capacity Expansion

A new battery module can be added onto an existing system at any time. Make sure that the new battery is acting as the master. The new module, due to a higher SOH may have a difference on SOC with existing system, but it will not affect the parallel connection system performance.

3.4 Schematic Diagram of Solution

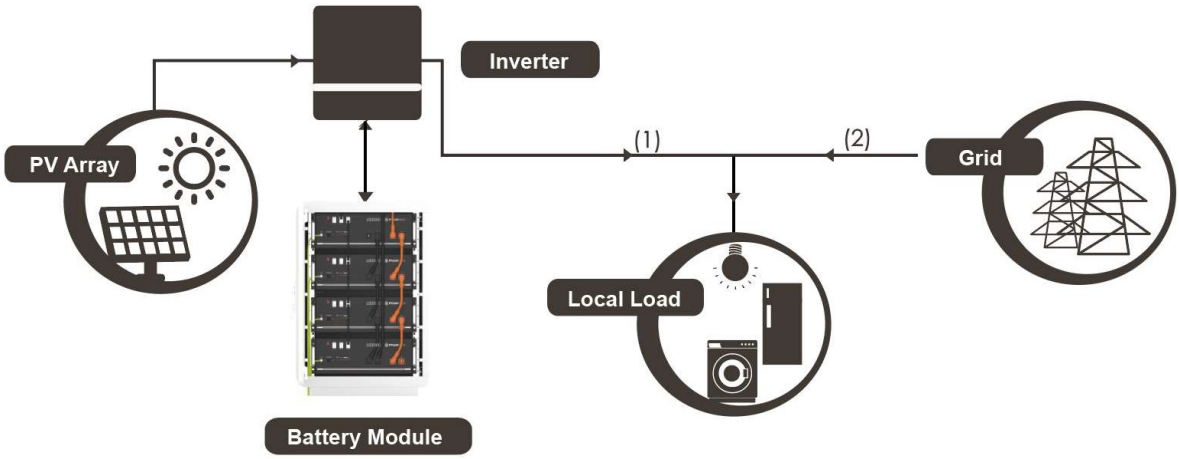

3.5 Label

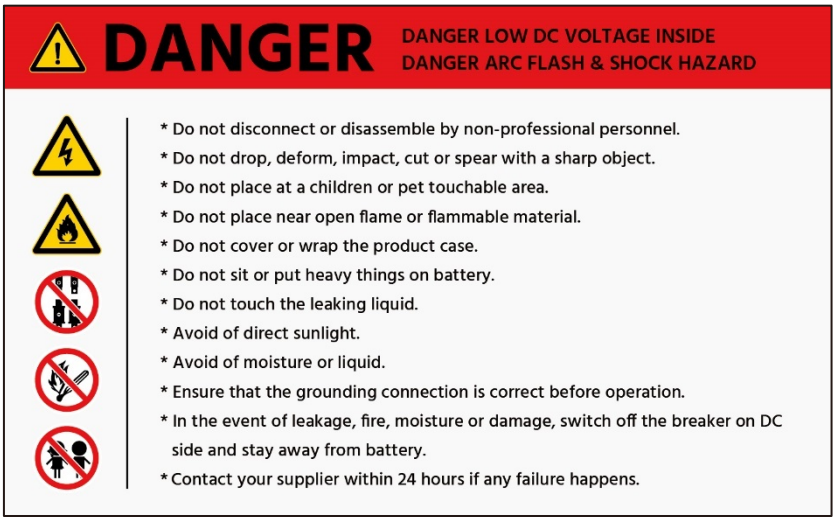

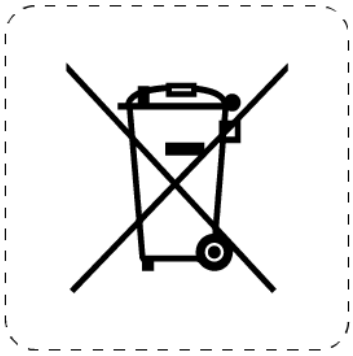

4 Installation and Cable Connection

4.1 Checking Before Installation

Checking the Outer Packing and Deliverables

- After receiving the product, check the outer packing for damage, such as holes, cracks, deformation and so on. If any damage is found, contact the local retailer as soon as possible.
- After unpacking the battery, check that the deliverables are complete. If any item is missing or damaged, contact the local retailer as soon as possible.

NOTE: For details about actual deliverables, see the Packing List in the packing case.

Package Items

1) For battery module package:

- Battery Module
- 2 x 210 mm 4 AWG (21.15mm^2) power cables
- 1 x 210 mm RJ45 communication cable
- 1 x 1000 mm 6AWG (13.3mm^2) grounding cable

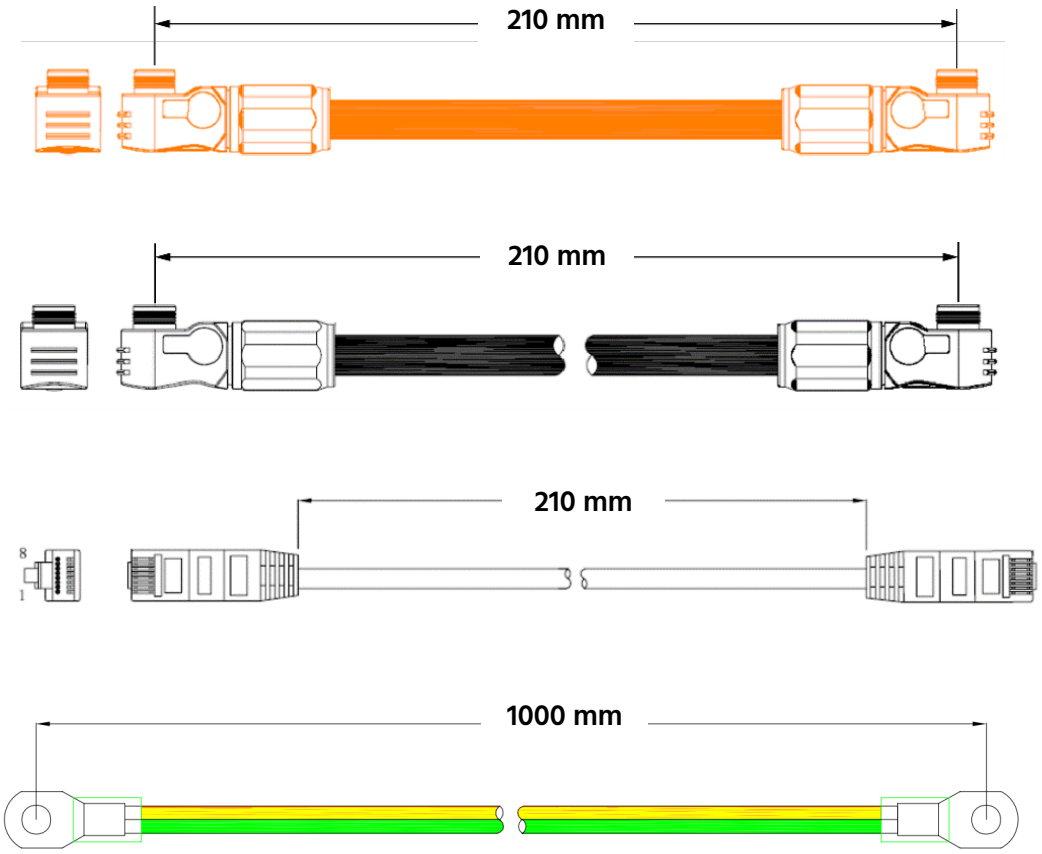

2) For External cable kits:

NOTE: Power and communication cables connect to inverter belong to an **External Cable Kit, NOT included in the battery carton box.** They are in another **extra** small cable box. If there is anything missing, please contact the local dealer.

- 2 x 2000mm power cables (4 AWG [21.15mm^2]), peak withstand current **120A,** constant **100A**) and communication cable for each energy storage system.
- 2 x 3000mm RJ45 communication cable, specification as below:

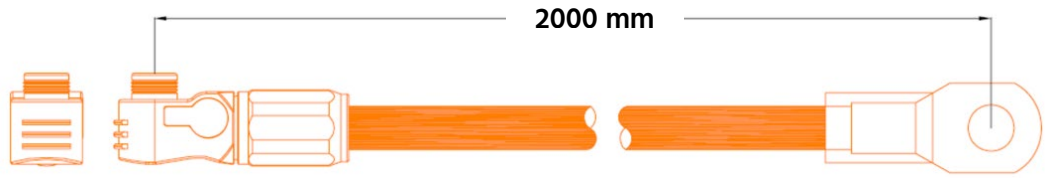

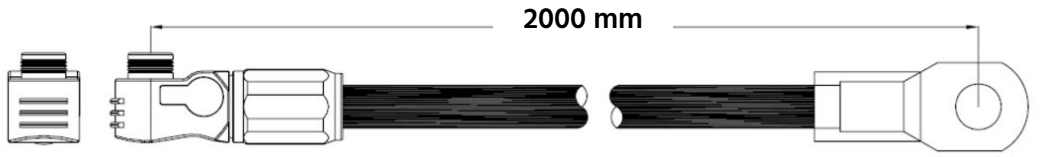

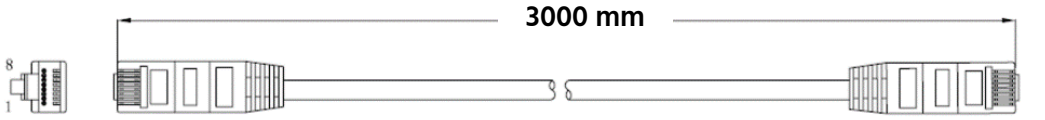

SN of RJ45cable	Mark	Pin	Description
WI0SCAN30RJ1	With blue mark: Battery-Inverter	1~3: NULL 4~8: pin to pin	For connection to inverter and HUB
WI0SCAN35RJ3	With silver mark: Battery-Battery	1~8: pin to pin	For parallel connection between master batteries

For the external cables, the length shall be less than 3 meters.

4.2 Preparing Tools and Instruments

Tools and Instruments

Type	Tools and Instruments		
Installation	Wire Cutter	Crimping Modular Plier	Screwdriver Set
Personal protective equipment (PPE)	Insulated gloves	Safety goggles	Safety shoes

NOTE: Use properly insulated tools to prevent accidental electric shock or short circuits. If insulated tools are not available, cover the entire exposed metal surfaces with available insulated alternatives, except their tips, with electrical tape.

4.3 Selecting the Installation Sites

There are following requirements for the working environment.

Cleaning

⚠ DANGER

Danger: Before installation and system power on, the dust and iron scurf must be removed to keep a clean environment.
The system cannot be installed in desert area without an enclosure to prevent from sand.

⚠ DANGER

Danger: Battery module has active DC power at terminals all the time. Be careful to handle the modules.

Temperature

⚠ WARNING

Warning: For this system, working temperature is -10°C~ 50°C and the optimum temperature is: 10°C~ 40°C. Out of the working temperature range may cause the battery system over/low temperature alarm or protection which will further lead to the cycle life reduction. It will affect the warranty terms as well.

There are no mandatory ventilation requirements for battery module, but please avoid of installation in confined area. The aeration shall avoid high salinity, humidity or temperature. The installation area should be completely waterproof. **DO NOT** expose the battery system to direct sun light. It is suggested to build sunshade equipment.

⚠ CAUTION

Caution: The IP rating of US5000 (US5000-B) system is IP20. But please avoid frost or direct sunlight. Out of the working temperature range will cause the battery system high / low temperature alarm or protection which will further lead to the cycle life reduction. According to the environment requirements, a cooling system or heating system should be installed when necessary.

Clearance

Minimum clearance to heat source shall be more than 2 meters.

Minimum clearance to air outlet of inverter is more than 0.5 meters.

Installation supporting surface

The installation floor or surface should be flat and level.

4.4 System Installation

DANGER

Danger: The system is a high voltage DC system, operated by qualified and authorized person only.

4.4.1 Battery Dimensions

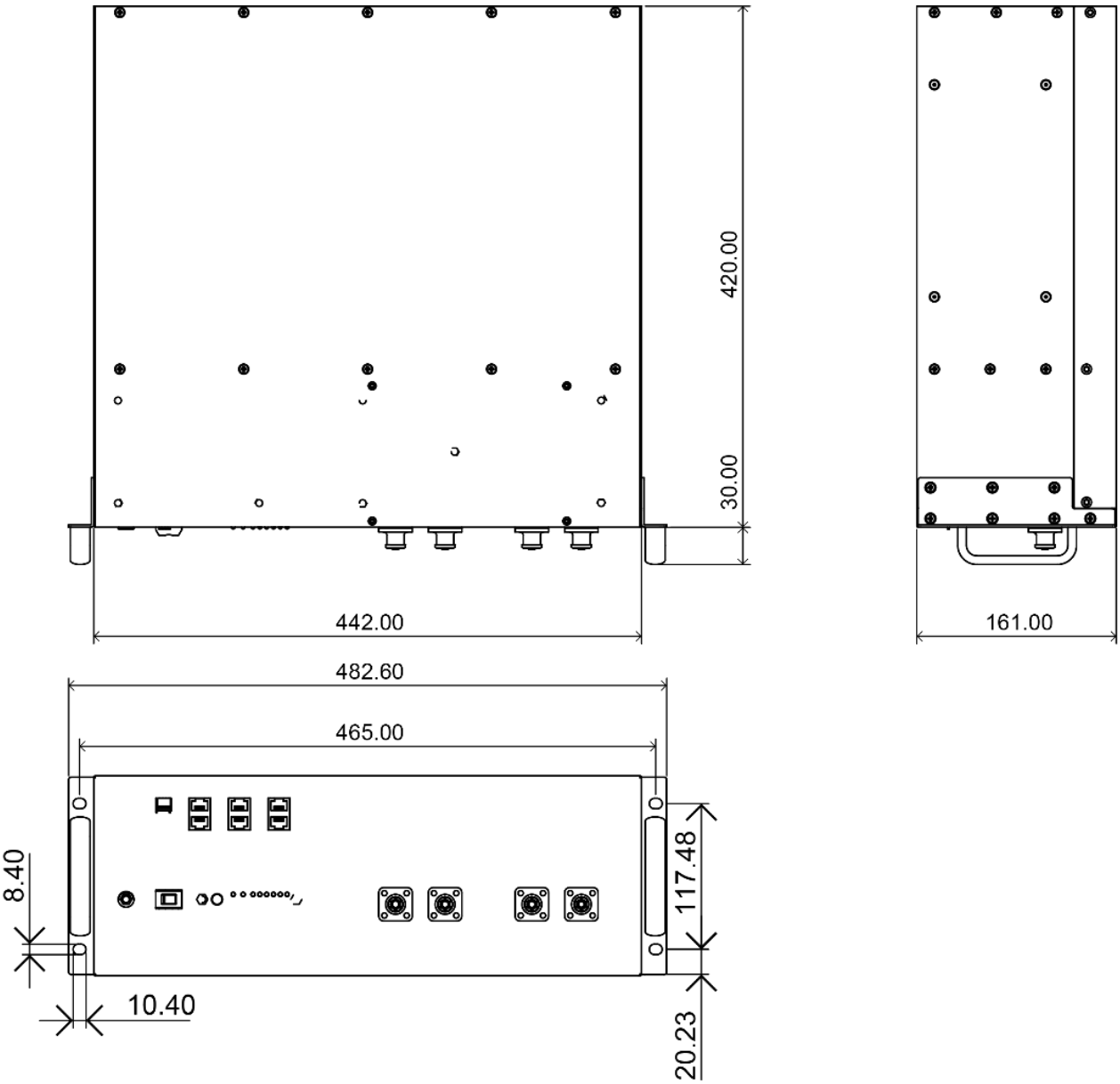

(Unit: mm)

4.4.2 Installation Direction

NOT allowed:

Upside down ☒	
Stack together ☒ ***NOTE:*** DO NOT stack modules together directly.	
Install only relying on two handles ☒ ***NOTE:*** DO NOT install relying on two handles.	

Recommended:

☑	
☑	 ***NOTE:*** Make sure there is holder for more than 40kg weight at bottom of each module.

4.5 Cable Connection

⚠ DANGER

Danger: No short circuit or reverse connection of the battery system's positive and negative ports.

⚠ CAUTION

Caution: Wrong communication cables connection will cause the battery system failure.

4.5.1 Grounding

Grounding cables shall be 6 AWG (13.3mm^2) or higher yellow-green cables. After connection, the resistance from battery grounding point to ground connection point of room or installed place shall be smaller than 0.1Ω.

1) There should be direct metal-to-metal contact between the module surface and the rack surface. If painted racks are used, the corresponding place shall be removed from painting.

2) Connect a grounding cable to the grounding point of the modules.

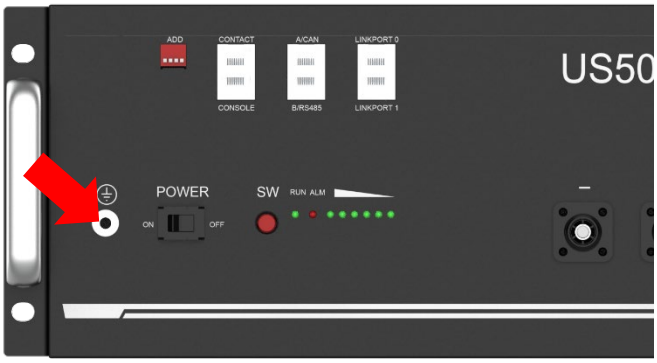

4.5.2 Putting into Cabinet or Rack

Put battery modules into cabinet and connect the cables as following.

1) Put the battery into the cabinet.
2) Drive the 4 screws for each module.

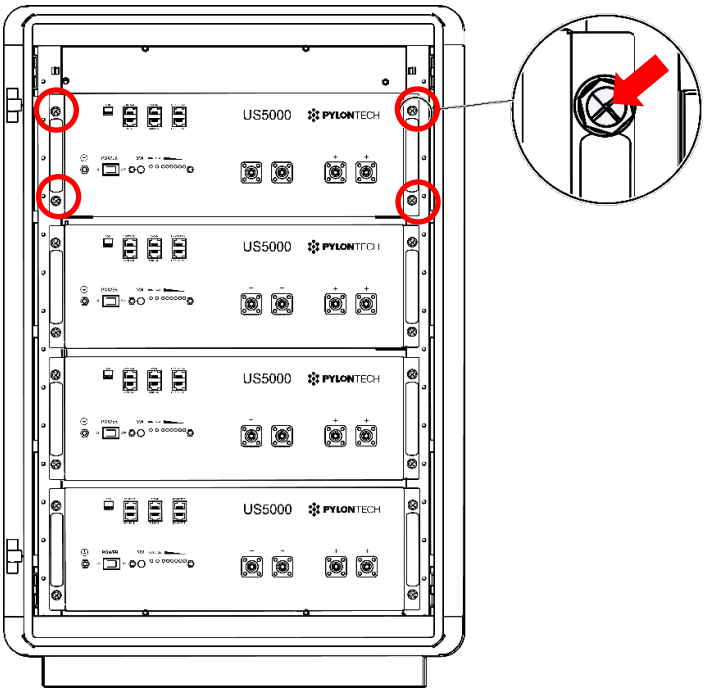

3) Connect the ground cables from the grounding point of the batteries to the ground copper bar and screw the cables as follows.

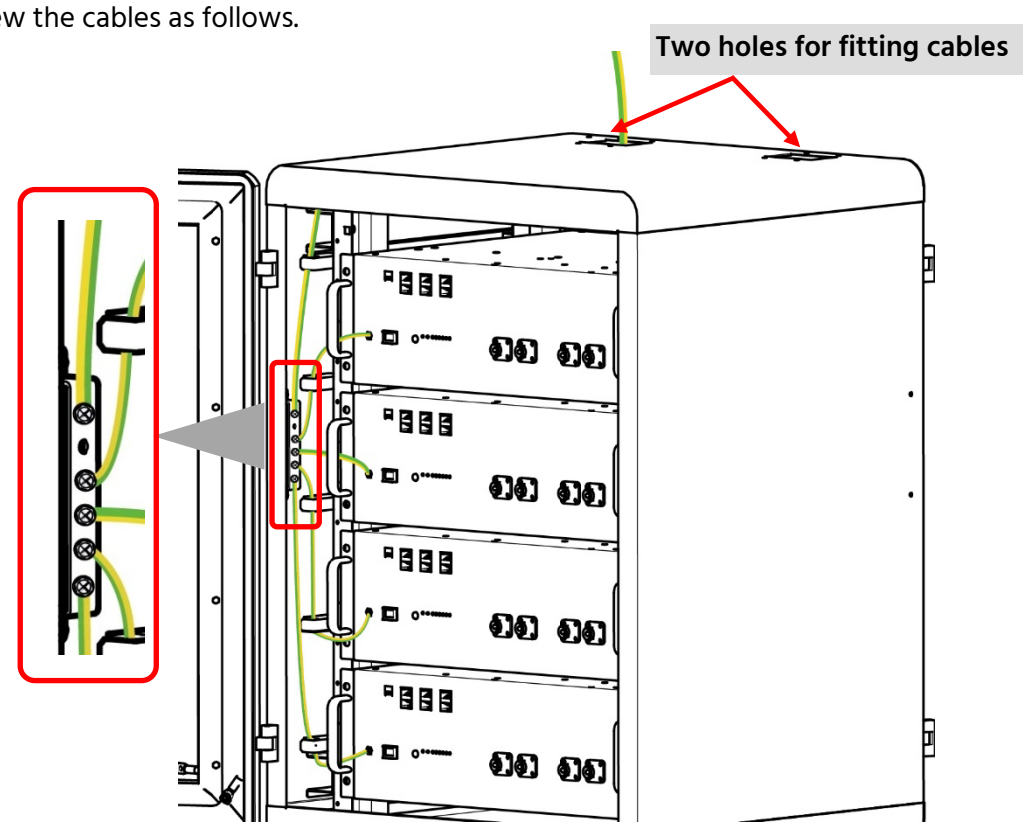

4) Connect the power cables between battery modules.

5) Connect the communication cables to the inverter.

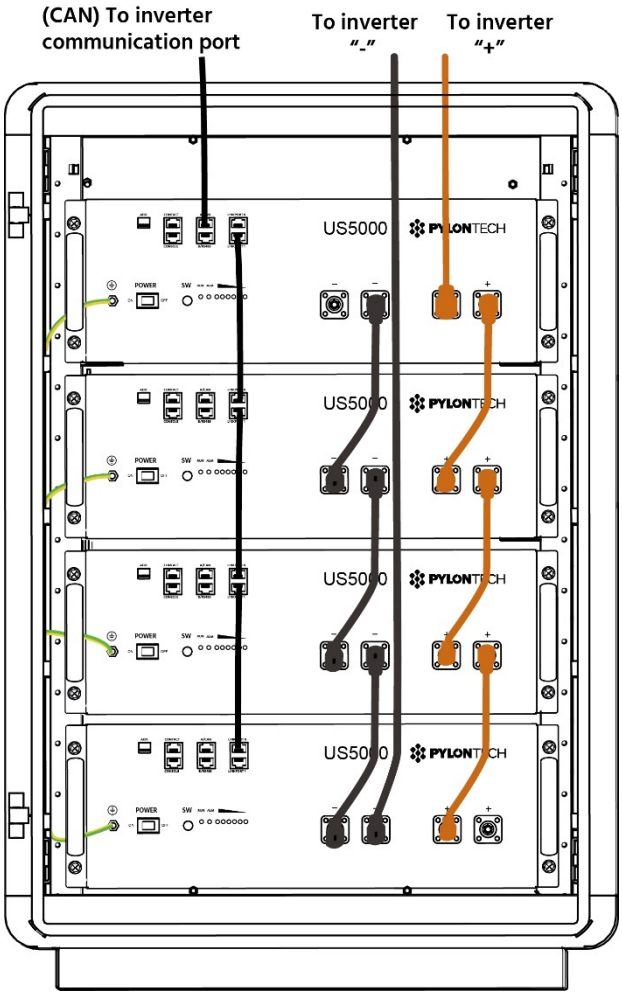

NOTE: Make sure to open the two covers on top of the cabinet and fit the cables through the holes.

4.5.3 Installing Brackets

1) Install two pieces of brackets onto the battery.

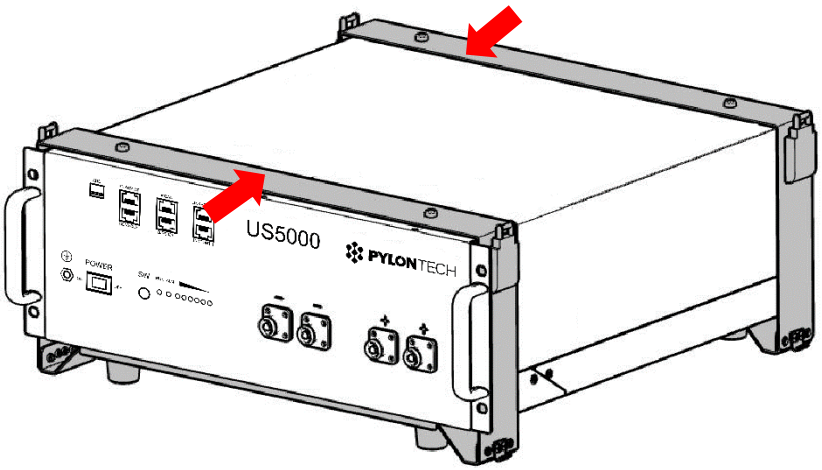

2) Stack the batteries together aligning 4 location holes. And lock the 4 buckles respectively.

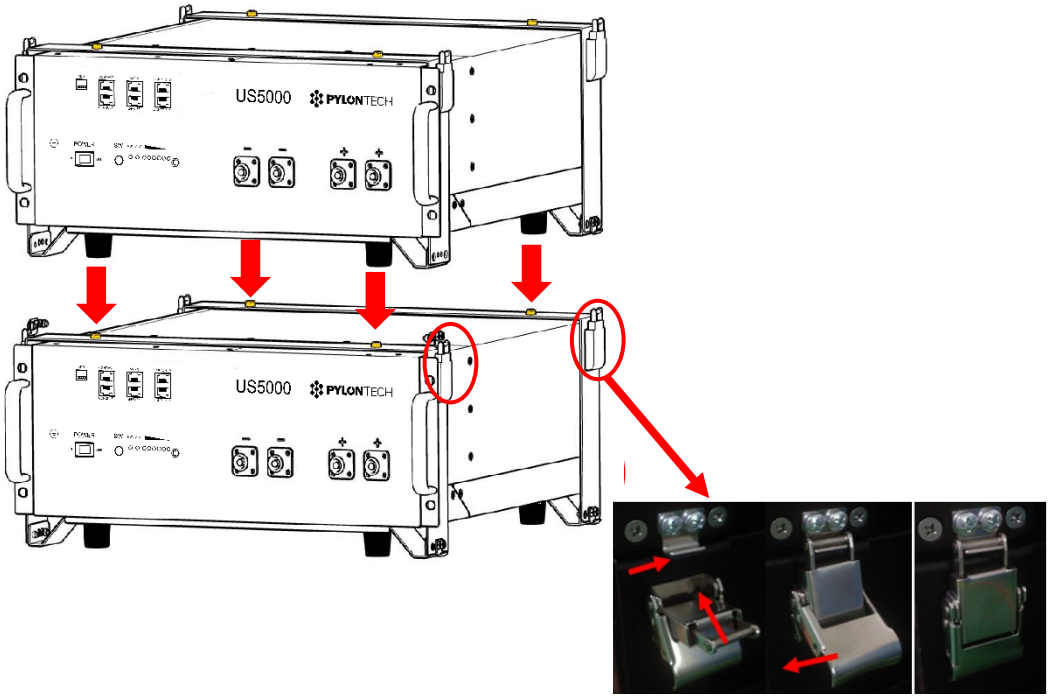

3) Connect the power cables between battery modules.

4) Connect the communication cables to the inverter.

NOTE: There are maximum 3 batteries per stack.

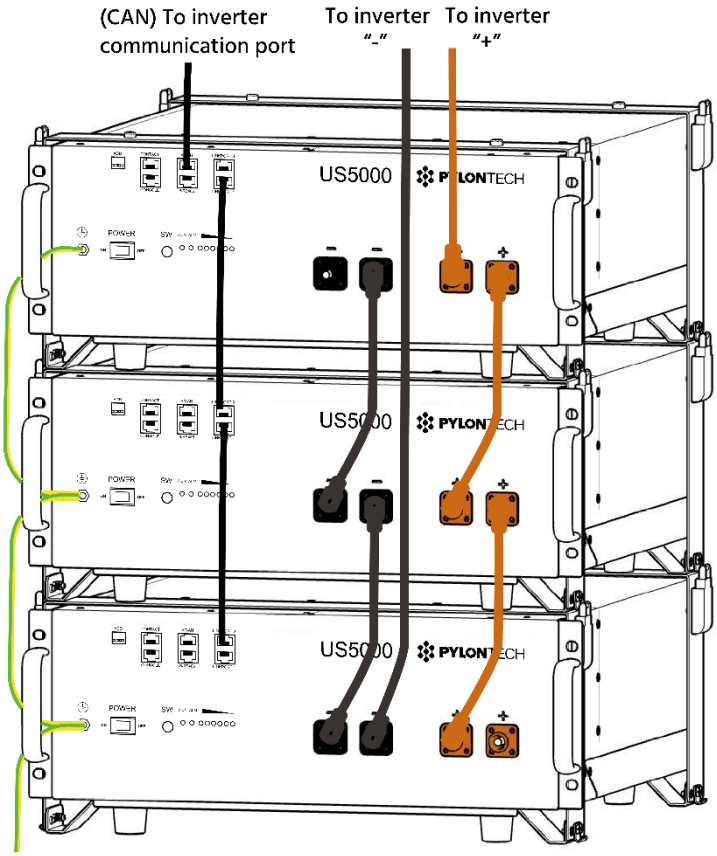

NOTE: **After installation, DO NOT forget to register online for full warranty:**

www.pylontech.com.cn/service/support

4.5.4 Installing the wall mount rack

To save space, US5000 is equipped with a wall mount rack for vertical installation as shown. For the installation procedure, please refer to the *Installation Guide of Wall Mount Rack* for detailed instructions.

NOTE: Single rack weights about 10 kg. The supporting ground or mounted wall must be strong to hold the overall weight of the battery system (about 120 kg of 3 batteries' system).

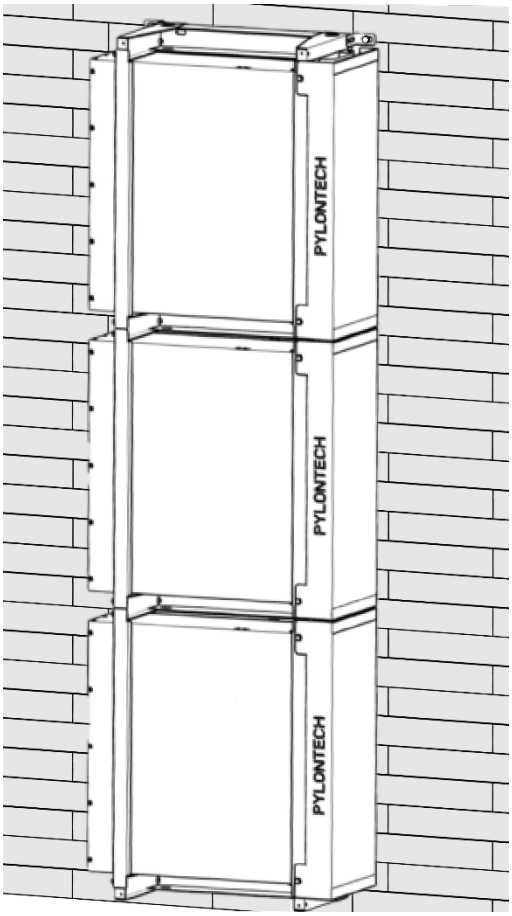

4.6 Suitable Disconnection Device

It is recommended to have a disconnection device for protection between battery system and inverter:

1) The rated voltage should be ≥60V DC. DO NOT use an AC breaker.
2) The rated current should match with system design:
   The following factors shall be considered:
   - the maximum DC current on inverter side.
   - the number of power cable: for instance, if there's only one pair of 4 AWG (21.15mm^2) cable, the rated current of breaker shall be 125A or smaller.
3) If using a breaker, it shall be type C (recommended) or type D.
   The Icu required:
   the maximum short circuit current for calculation of each module is 2500A.

   For instance:

Battery amount	Icu of breaker
1~4 modules	Must ≥ 10kA
5~8 modules	Must ≥ 20kA

5 Operation

5.1 System Turning On

⚠ WARNING

Warning: Double check all the power cables and communication cables. Ensure that the voltage of the inverter/PCS matches the voltage of the battery system. Check that all the power switches are OFF.

Procedure

NOTE: The following illustrations take the example of the batteries installed in brackets. It works the same for the batteries installed in a cabinet.

1. Check that the grounding cable is connected.
2. Turn on the switch for battery on the inverter or the switch between inverter and the battery system (if it is equipped with).
3. Switch on all modules` breakers first (applies to US5000-B ONLY).
4. Switch on all the battery modules by setting the POWER switch to ON.

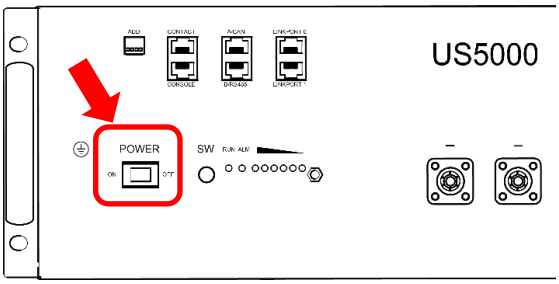

NOTE: The one with empty Link Port 0 is the Master Battery Module, others are slaves (1 master battery configuring maximum 15 slave batteries):

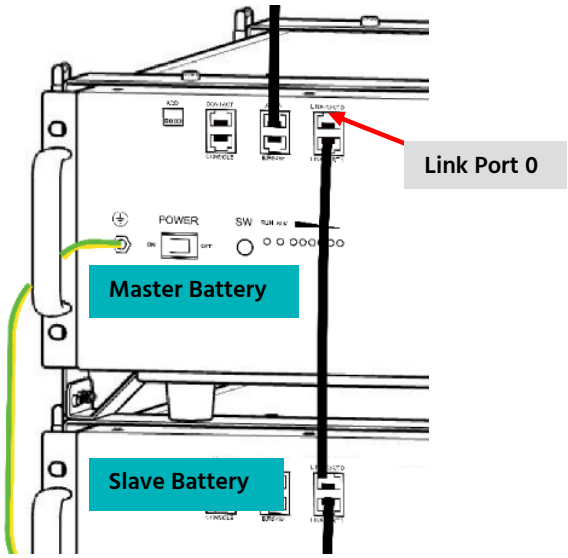

5. Press the red SW button of master battery to power on. After the master battery LED turns on, the LEDs on all the batteries will be on one by one from the Master battery.

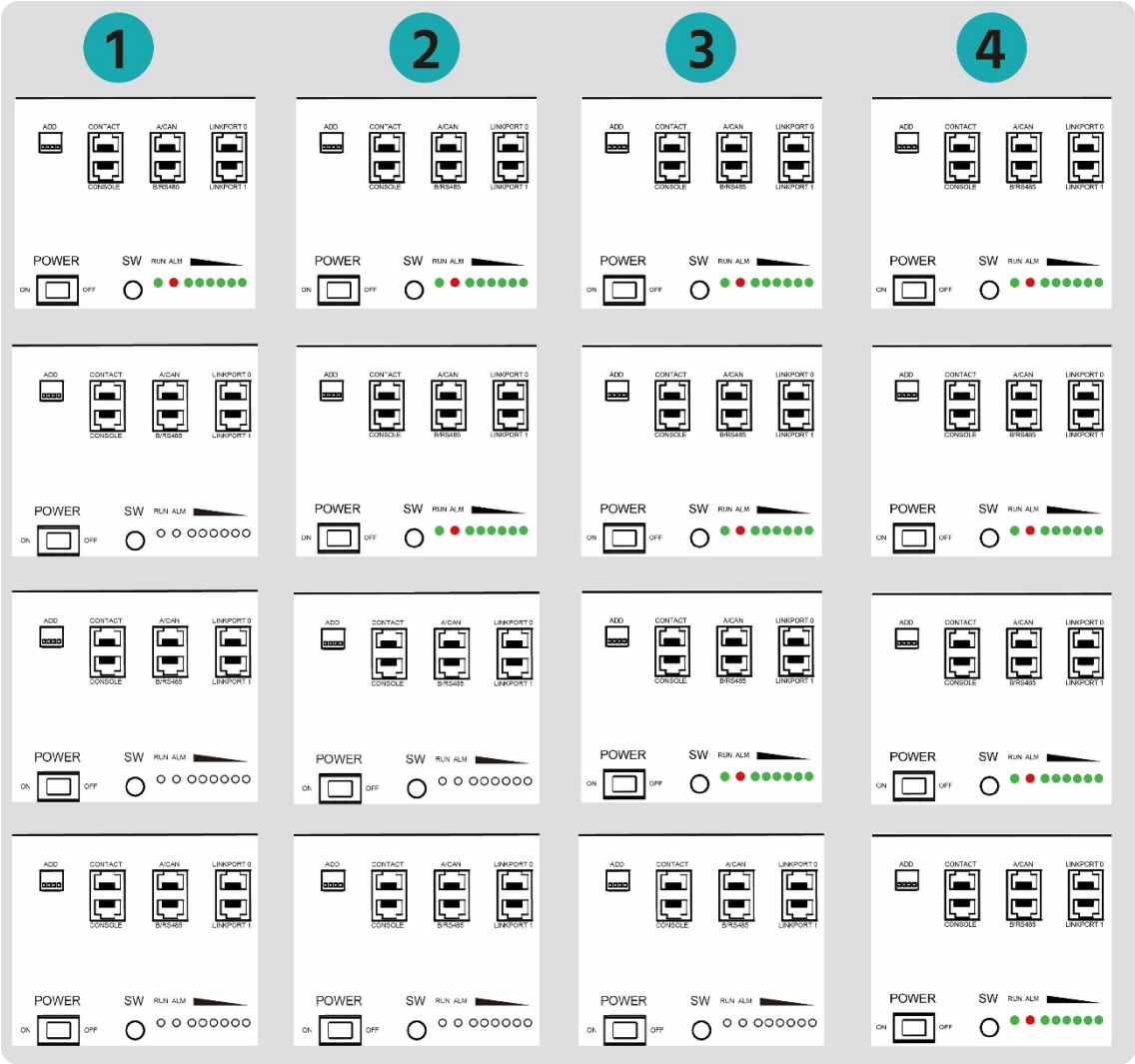

NOTE:

1) After the battery module is powered on, the soft-start function takes **3 seconds** to activate. When the soft start is complete, the battery is ready for high power output.
2) When connecting modules with different SOC/voltage in parallel during expansion or replacement, it is recommended to maintain the system in idle for ≥15 minutes or till the SOC LEDs becomes similar (≤ 1 dot difference) before normal operation.

5.2 System Turning Off

DANGER

Danger: When any failure occurs or there is a need for service, the battery storage system must be powered off at first.

Procedure

1. Turn external power supply off.
2. Press red SW switch of master battery. Then all batteries will be off.
3. Set the Power switches to OFF on master battery and all slave batteries.
4. Switch off all modules` breakers (applies to US5000-B ONLY).
5. Turn off the switch for battery on the inverter or the switch between inverter and the battery system (if it is equipped with).

5.3 Multi-groups Mode

- By **RS485**: DO NOT need a LV-HUB.

1) Connect power cables first:

NOTE: Each pair of cables withstands maximum 100A constant current. Connect enough pairs of cables based on calculation of system current.

2) A suitable protection device between battery system and inverter is required.

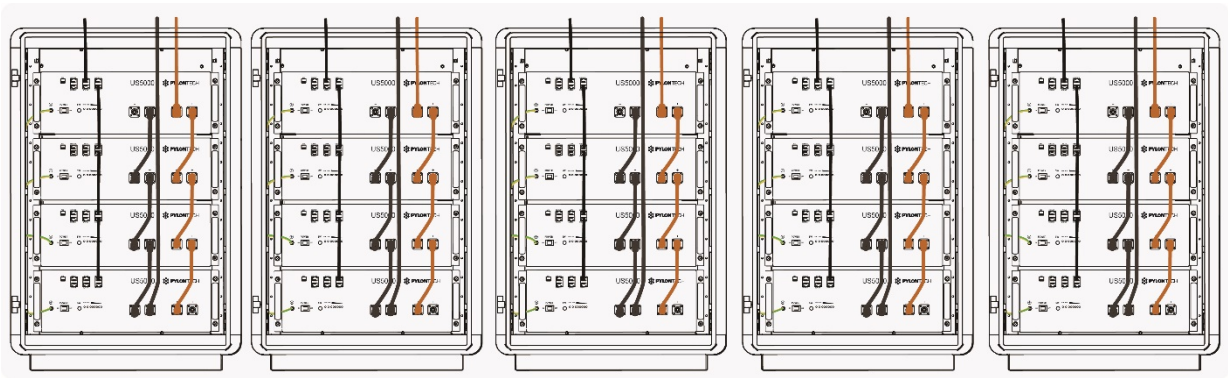

3) Make sure each master battery dip switch for each group is R000.

NOTE: "R" is the baud rate of RS485, all master batteries shall be the same.

4) Connect communication cables following the illustration below.

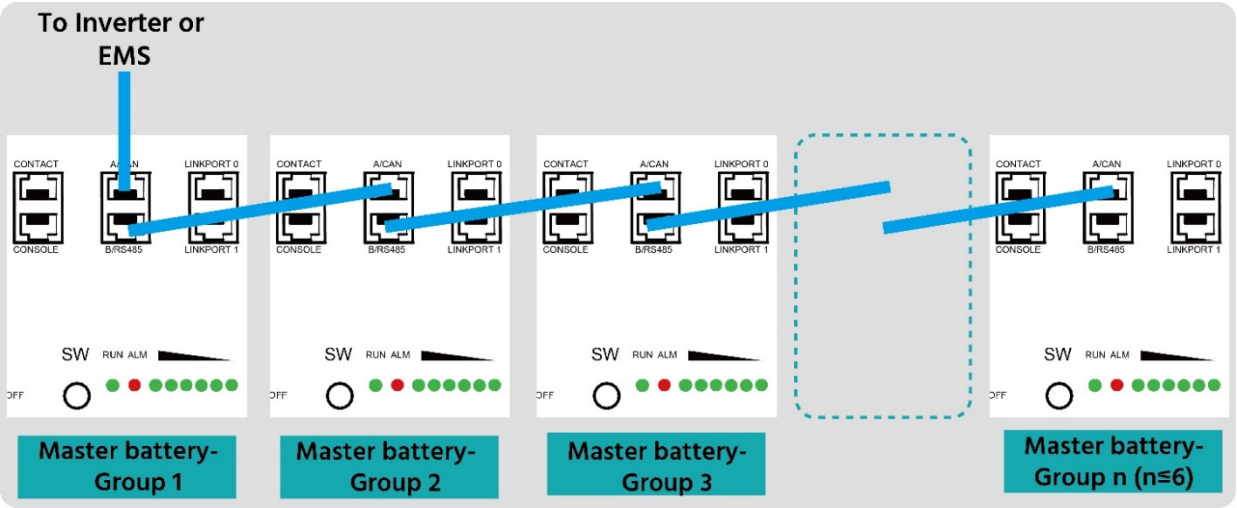

NOTE:

❶ There are maximum 6 battery groups in one system.

❷ The A/CAN of 1st group/master battery connects to inverter or EMS.
(PIN 7A, 8B; DO NOT connect other pins.)

❸ The B/RS485 connects to A/CAN of next group; The B/RS485 of last group is EMPTY.

5) Turn ON the batteries. After all batteries running and buzzer of master battery in group1 rings 3 times, it means all groups are online.
For inverter or EMS, the interruption of each RS485 command shall be at least≥ 1 second.

- By **CAN:**

1) Connect power cables first:

NOTE: Each pair of cables withstands maximum 100A constant current. Connect enough pairs of cables based on calculation of system current.

2) A suitable protection device between battery system and inverter is required.
3) Connect power cable of LV-HUB.
4) Connect communication cables following the illustration below.

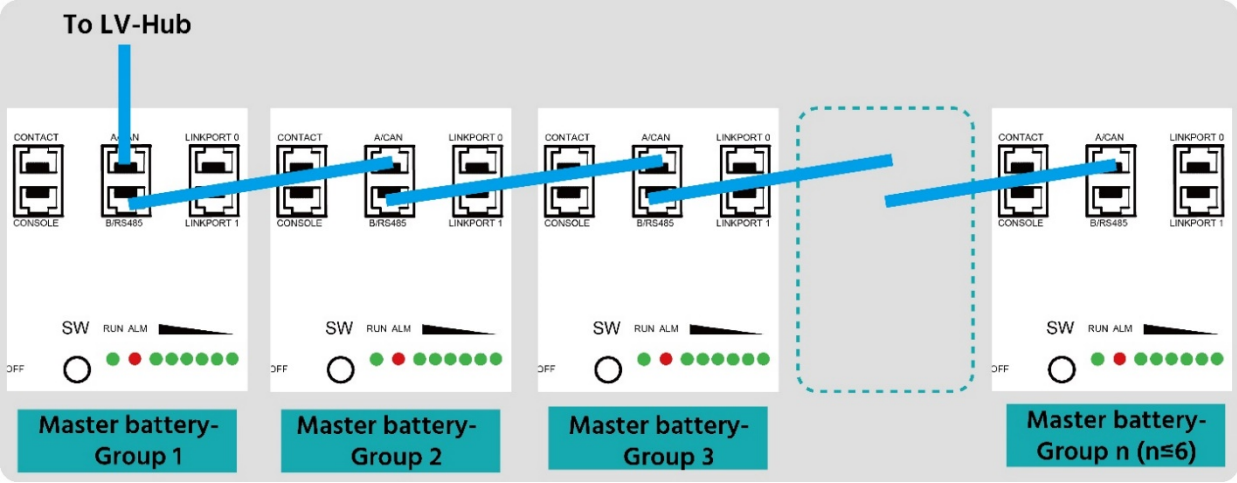

NOTE: For the cable from master battery to LV-HUB, it is recommended to use WI0SCAN30RJ1 or cable with pin 1~3 empty.

5) Make sure each master battery dipswitch for each group is 0000, then turn ON batteries.
6) After all batteries running and buzzer of master battery in group1 rings 3 times, it means all groups are online.
7) Change the dip switch of **master battery in group1** to 0100. Then connect communication cable between LV-HUB and master battery in group 1.
8) Then turn ON LV-HUB.
   Detailed information please refer to manual of LV-HUB.

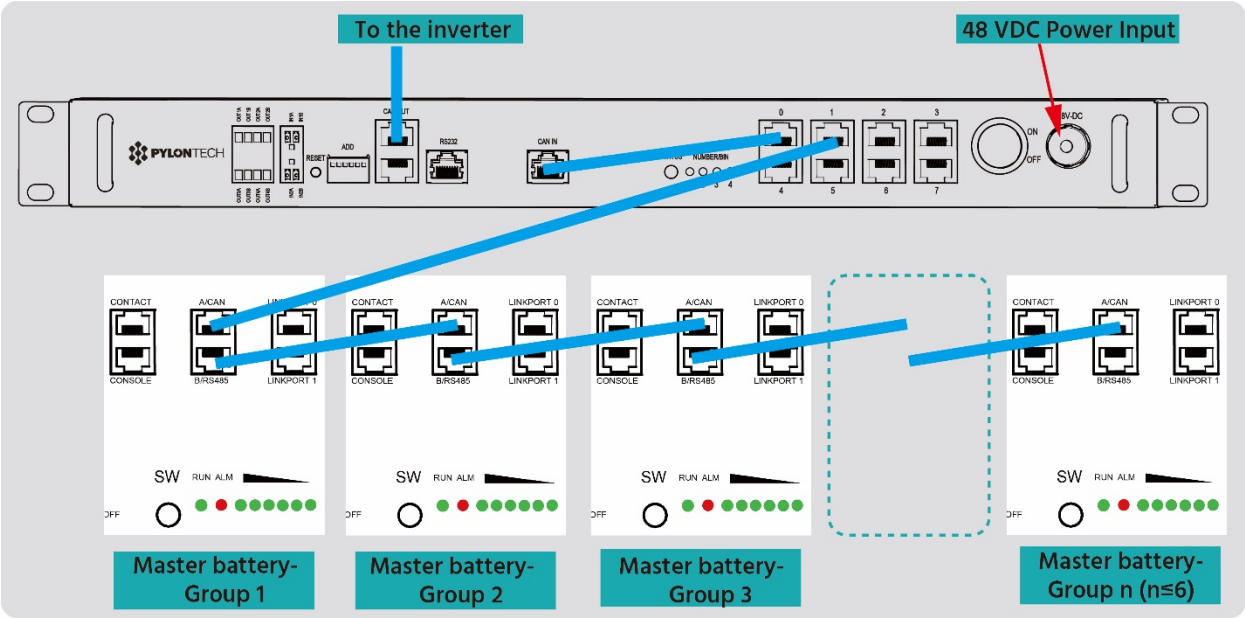

NOTE:

❶ Each Communication Hub connects maximum 6 battery groups.

❷ The A/CAN of 1st group/master battery connects to port 1~7 freely.

❸ The B/RS485 connects to A/CAN of next group; The B/RS485 of last group is EMPTY.

6 Troubleshooting

- **Communication related problem**

Unable to communicate with inverter on compatible list.

Possible conditions:

1) RS485: baud rate. Check the dip switch 1, set to correct one, and restart. All master batteries shall be the same.
2) CAN: terminal resistance. Check the dip switch2, set to 0 and retry.
3) CAN: pin. Try to connect the CAN-H, L, GND only and do not connect other pins to inverter, using the correct cables.

- **Functional related problem**

1) Whether the battery can be turned on or not.
2) If the battery is turned on, check that the red light is off, flashing or lighting.
3) If the red light is off, check whether the battery can be charged or discharged.

Possible conditions:

1) Battery cannot be turned on. Switch ON and press the red SW, the lights are all no lighting or flashing.

a) Capacity is too low, or module over discharged.
Solution: use a charger or inverter to provide 48-53.5V voltage. If battery can start, then keep charging the module and use monitor tools to check the battery log.
If battery terminal voltage is ≤ 45VDC, please use ≤ 0.05C to slowly charge the module to avoid affect to SOH. If battery terminal voltage is >45VDC, it can use ≤ 0.5C to charge.
If battery cannot start, turn off the battery and repair.

2) The battery can be turned on, but red light is lighting, and cannot charge or discharge. If the red light is lighting, that means system is abnormal, please check values as following.

b) Temperature: Above 50°C or under -10°C, the battery could not work. Solution: to move battery to the normal operating temperature range between 0°C~ 50°C.

c) Current: If current exceeds 90 A, battery protection will be enabled.
Solution: Check whether current is too high or not; if it is, change the settings on power supply side.

d) High Voltage: If charging voltage above 54V, battery protection will be enabled.
Solution: Check whether voltage is too high or not; if it is, change the settings on power supply side. And discharge the module.

e) Low Voltage: When the battery discharges to 44.5V or less, battery protection will be enabled.
Solution: Charge the battery till the red light turns off.

f) Cell voltage high. The module voltage is lower than 54V, SOC LED does not all light on. When discharge the module, protection disappears.
Solution: keep charging the module by 53-54V or keep the system cycle. The BMS can balance the cell during cycling.

3) Unable to charge and discharge with red LED on. The temperature is 0°C~ 50°C. Use charger to charge, not possible. Use load to discharge, not possible.

g) Under permanent protection. The single cell voltage is higher than 4.2V or lower than 1.5V or temperature is higher than 80°C.

Solution: Switch off the module and contact your local distributor for repair.

4) Unable to charge and discharge without red LED on. The temperature is 0°C~ 50°C. Use charger to charge, not possible. Use load to discharge, not possible.

h) Fuse broken.

Solution: Switch off the module and contact your local distributor for repair.

5) Buzzer rings and **all LED flash.**

i) High voltage protection.

Cell voltage higher than 4V or module voltage higher than 55.5V.

Solution: **Battery system requires properly established communication with inverter and correct settings on inverter to run safe.**

Check the settings of the inverter or charger, the charge voltage shall be 53.2~52.5VDC. Check the communication between battery system and inverter whether established or not. Check the ADD switch on battery module whether is set correct or not.

Under this condition, the BMS remains functional without damage. Just leave the module switched OFF and wait for the battery voltage drop down naturally (15 minutes) then restart. If then no alarm comes out, this means the module is ready for work.

6) Buzzer rings and **ALM solid red.**

j) Reverse connection of cables.

Solution: Power off all battery and inverters. Disconnect breaker. Check the cable connection and disconnect all power cables. Check the power port damaged or not. Then try turn on the single module, without any cable connected. If no alarm, then it is reverse connection of cables. Switch off the module and contact your local distributor.

k) MOSFAIL.

Solution: Power off all battery and inverters. Disconnect breaker. Check the cable connection and disconnect all power cables. Check the power port damaged or not. Check the setting of inverter or charger, check the communication between inverter and battery system.

Try turn on the single module, without any cable connected. If still buzzer rings. Then switch off the module and contact your local distributor.

7) After switching On, the module turns on directly.

l) BMS failure.

Solution: Switch off the module and contact your local distributor.

Excluding the points above, if the faulty still cannot be located, turn off battery and contact your local distributor.

7 Emergency Situations

⚠ CAUTION

Caution: Damaged batteries may leak electrolyte or produce flammable gas.

Problem	Description		Action
Leaking Batteries	If the battery pack leaks electrolyte, avoid contacting with the leaking liquid or gas. If anyone is exposed to the leaked substance, immediately perform the actions.	Inhalation.	Evacuate the contaminated area and seek medical attention.
		Contact with eyes.	Rinse eyes with flowing water for 15 minutes and seek medical attention as soon as possible.
		Contact with skin.	Wash the affected area thoroughly with soap and water, and seek medical attention as soon as possible.
		Ingestion.	Induce vomiting and seek medical attention.
Fire	The battery cell is catching fire.		1. Firstly, cut off the external power supply. 2.Then use vast of water for suppression. 3. After extinguishing the fire, soak the battery in water and contact Pylontech or an authorized dealer.
	The cabling or other component (not battery cell) is catching fire.		1. Firstly, cut off the external power source. 2. Then use dry powder fire or carbon dioxide extinguisher for suppression.
Wet Batteries	The battery module is wet or submerged in water.		1. Cut off all power switch on inverter side. 2. DO NOT let people access it, and contact Pylontech or an authorized dealer for technical support.
Damaged Batteries	Damaged batteries are dangerous and must be handled with the utmost care. They are not fit for use and may pose a danger to people or property.		If the battery pack seems to be damaged, pack it in its original container, and then return it to Pylontech or an authorized dealer.

8 Shipment and Storage

8.1 Shipment

Before shipment, single module is pre-charged to about 100% SOC, or according to customer requirements. After delivered on-site, the remaining battery capacity is determined by the storage time and condition.

- The battery modules should meet the UN38.3 certificate standard.
- In particular, local rules and policies for the product transportation shall be complied with. For more details, please enquiry the Safety Data Sheet (SDS) from Pylontech: service@pylontech.com.cn.

8.2 Storage & Maintenance

1) For long-term storage, e.g. if it needs to be stored for a long time (more than 6 months), the battery cells are highly suggested to be stored in the temperature range of 5°C~45°C, relative humidity <65% and corrosive-gas-freed environment. It is required to charge the battery at least once every 12 months, and the SOC should be no less than 90%.

> ⚠ **CAUTION**
>
> **Caution:** If you do not follow the above instructions for long term storage of the battery, the cycle life will decrease heavily.

2) After installation, it is suggested to check the connection of power connectors, grounding point, power cables and screws every year. Make sure that there is no loose, no broken, no corrosion at connection points. Check the installation environment such as dust, water, insect etc. Make sure that it is suitable for IP20 battery system.

9 Recycle and Disposal

In case a battery (normal condition or damaged) needs disposal or needs recycling, it shall follow the local recycling regulations to process, and use the best available techniques to achieve a relevant recycling efficiency.

Pylon Technologies Co., Ltd.

No. 300, Miaoqiao Road, Kangqiao Town

Pudong New Area, Shanghai, 201315, China

T +86-21-51317699

E service@pylontech.com.cn

W www.pylontech.com.cn